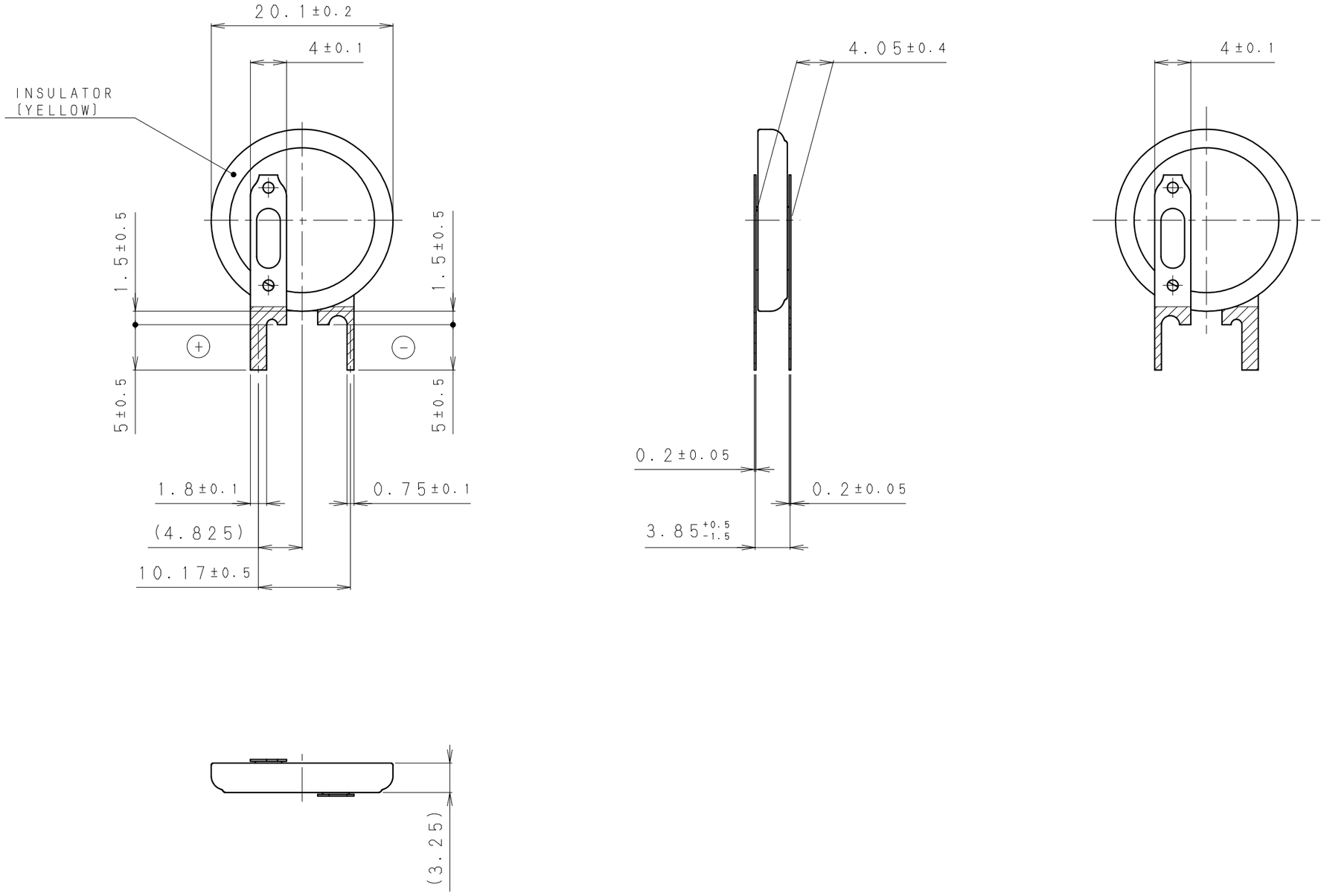

NOTE
1. NOMINAL VOLTAGE:3V
2. TAB WELDING STRENGTH OVER 19.6N
3. TAB MATERIAL:STAINLESS STEEL WITH TIN PLATING
4. ( ):REFERENCE DIMENSION AND ANGLE

PRODUCT NO.	CR-2032/VC1	SCALE 2:1
DRAWING NO.	PD-CR-2032/VC1-G	UNIT:mm